FOOD PREPARATION
MIXERS

HOBART UK,
SOUTHGATE WAY,
ORTON SOUTHGATE,
PETERBOROUGH.
PE2 6GN
0844 888 7777

www.hobartuk.com

40 Litre Floor Standing Mixer — HSM40SS-F1E

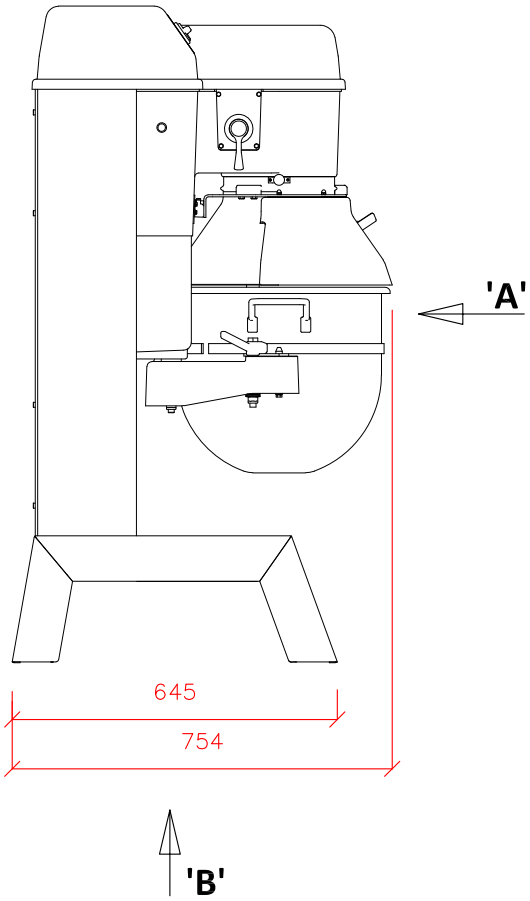

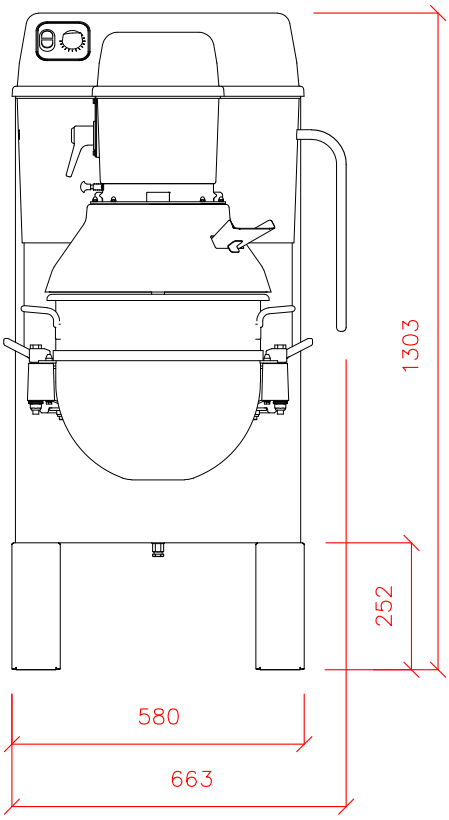

View on 'A'

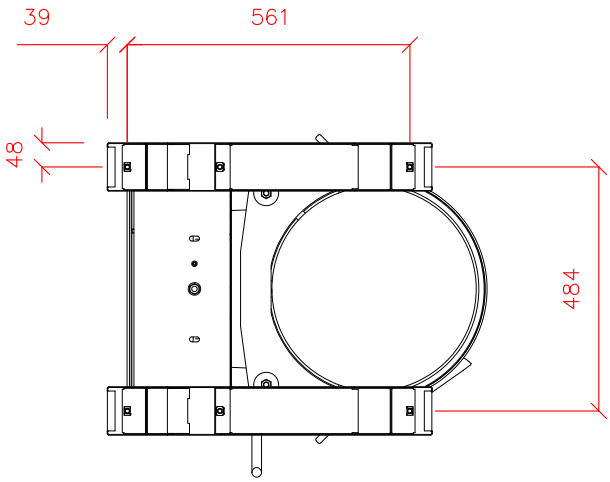

View on 'B'

1 Electric - (1 Phase Supply)

1.1kW - 230/50/1 Recommended to be fused at 20amps

2 Weight

Mixer weight including agitator and bowl (empty) - 205kg
Shipping weight (on wooden pallet). - 223kg

PLOT SCALE: 1:15